PARTS LIST

ED−5

□74 CLAMP CL−743E

⚠ Notice

1) Please acknowledge, we will stop the replenishment of stocks of parts when seven (7) years have passed after sale or ten (10) years have passed after suspended production, therefore becoming parts supply only of our stock's worth.
2) "Listed each prices" are up dated one (date of the price correction), please acknowledge it will be changed in the future without any prior notice.

MARK	DATE OF	CONTENTS OF AMENDMENT
△1	May 21, 2010	Part No.27 is changed in the page 3 and Part No. 28 is added. Price revision. (44-事 0001)
△2	Apr. 22,2015	① Changed from No.9 Knob ball Black 6V to Knob Ball C493 in the page3. (48-生 0012). ② List price revision.

ISSUE : March 01, 2004

CONSEC CORPORATION

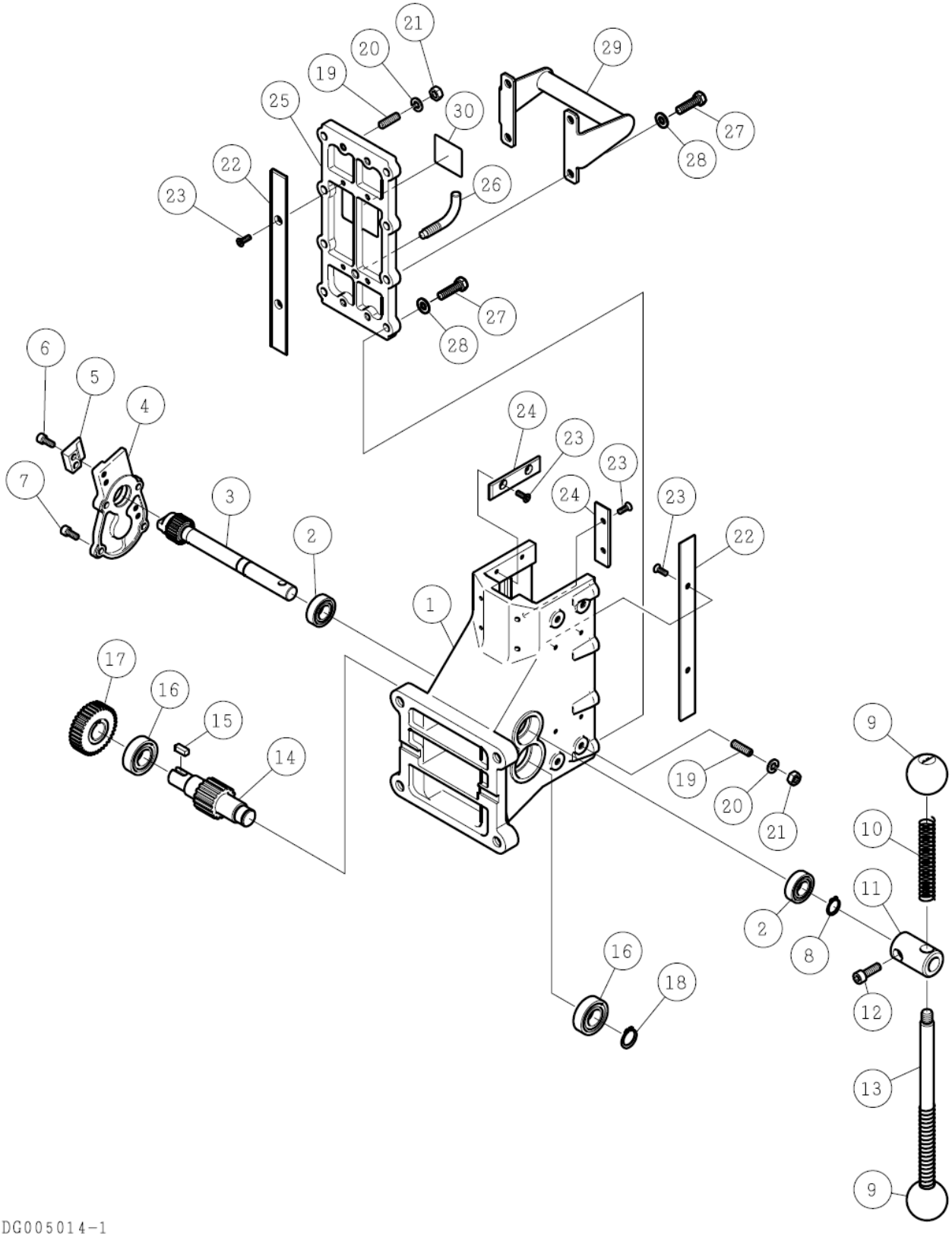
21
20
19
29
25
30
27
28
22
26
23
27
28
6
5
4
24
23
23
7
3
24
23
2
22
1
17
16
15
14
9
19
20
21
10
11
2
8
16
18
12
13
9

DG005014−1

NO.	CODE	DESCRIPTION / STANDARD	Q'TY	REMARKS	LIST PRICE EACH
1	002002956	Clamp main body C743	1	Dark gray	
2	003606003	Ball bearing 6003 – 2NSE	2		
3	002002961	Shaft gear 1.5M x 18T C743E	1		
4	002002388	Gear cover EH26A	1	Dark gray	
5	002000938	Hook (N) EH26	2		
6	002001622	Hex. socket cap screw M6 x 15 U Dry	4		
7	003380615	Hex. socket cap screw M6 x 15 U	4		
8	003110170	Snap ring S - 17	1		
9	002003308	Knob Ball C493	2	New)After No.0415	
	~~002001793~~	~~Knob ball Black 6V~~	~~2~~	Old)End of life	
10	002001792	Spring for handle 6V	2		
11	002001816	Handle boss 6V	1		
12	003380825	Hex. socket cap screw M8 x 25 (C) U	1		
13	002000025	Handle	1		
14	002002954	Shaft gear 2M x 17T C743	1		
15	002001247	Key 6 x 6 x 16	1		
16	003606004	Ball bearing 6004 – 2NSE	2		
17	002001230	Flat gear 1.5M x 37T UR	1		
18	003110200	Snap ring S - 20	1		
19	003420844	Hex. socket set screw (F) M8 x 25 U	8		
20	003340800	Spring washer II 8 U	8		
21	003280803	Hex. nut (III) M8 U	8		
22	002002959	Slide plate B C743	4		
23	003251512	Cross-recessed countersunk hd. screw M5 x 12 U	20		
24	002002958	Slide plate A C743	6		
25	002002957	Clamp cover C743	1	Dark gray	
26	002000225	L bolt M10	1		
27	003200830	Hex. Hd. Bolt M8X30 (Continuous Screw) Trivalent chromium	8	New)	
	003160366	~~Hex. bolt M8 x 30 P4 (C) U~~	~~8~~	Old)	
28	003330801	Plate Waher M8	8	New)	
29	002000809	Grip UN	1		
30	002002960	CL – 743 Name plate	1		

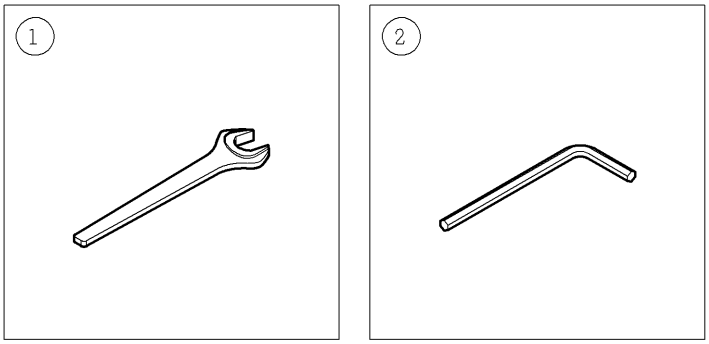

DG005304－0

NO.	CODE	DESCRIPTION / STANDARD	Q'TY	REMARKS	LIST PRICE EACH
1	003160632	Single-ended wrench 13mm N B	1		
2	003160087	Hex. bar wrench 4mm B	1		